Toyota Mobile Charger
User Guide

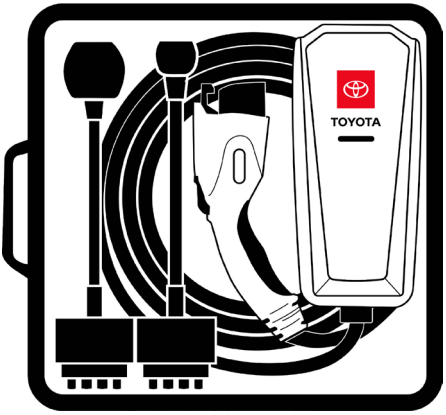

This page intentionally left blank.

A NOTE ON CUSTOMER SUPPORT

Please have your serial number ready

when contacting customer support.

Contents

Section 1 Introduction 5

SYMBOL USAGE 6

ABOUT YOUR TOYOTA MOBILE CHARGER 7

MOVING & STORAGE INSTRUCTIONS 9

CHARGER COMPONENTS 10

TECHNICAL DATA 11

SPECIFICATIONS 12

Section 2 Using Your Toyota Mobile Charger 13

KNOW YOUR INDICATOR LIGHTS 14

CHARGING YOUR VEHICLE 15

A NOTE ON AUTO-RESTART 16

CARE INSTRUCTIONS 16

Section 3 Troubleshooting 17

TROUBLESHOOTING GUIDE 18

Appendix 21

INSTALLING THE WALL HANGER 22

WALL HANGER MOUNTING INSTRUCTION 22

IMPORTANT SAFETY INSTRUCTIONS PERTAINING TO
A RISK OF ELECTRIC SHOCK..... 23

FCC INFORMATION 25

SAFETY FEATURES..... 26

Index 27

Section 1

INTRODUCTION

SYMBOL USAGE

DANGER

Indicates information about safety practices which, if not followed, may result in serious injury or death.

Risk of electric shock – parts inside this product are a risk of shock to persons.

WARNING

Indicates information about safety practices which, if not followed, could result in personal injury or are necessary to prevent fire or equipment overheating.

Do not operate the Toyota Mobile Charger on an un-grounded power grid (e.g. IT networks). Only operate the charger on grounded power grids.

Operating the charger at altitudes higher than 4,000 m (13,123 ft) above sea level is not recommended.

NOTE

Indicates helpful information for installation or usage, but does not contain personnel or equipment safety-related information.

ABOUT YOUR TOYOTA MOBILE CHARGER

The Toyota Mobile Charger is an easy-to-use, compact mobile power supply for your electric vehicle. The charger supplies and manages AC power to your Toyota electric vehicle.

WARNING

It is recommended that electrical outlets for use with your charger be installed by a licensed, qualified electrician. To avoid serious injury or death, installation must comply with the provisions of the Canadian Electric Code (CEC) and all local codes. In cases of conflict between local codes and the CEC, local codes shall take precedence.

Do NOT DROP the control box or coupler.

Do NOT use if stored outside the temperature range specified.

If the cable becomes separated from the control box or the charger coupler, DO NOT ATTEMPT TO REPAIR THE CABLE YOURSELF. Contact your local Toyota dealer.

WARNING

When using your Toyota Mobile Charger, basic precautions should always be followed, including:

- See the warnings on the charger cord label. Read the warnings before operating the product for the first time. Read all instructions in this guide before using this product.
- Never use the charger with an extension cord.
- Do not plug into worn or severely degraded plugs.
- Shock hazard – be sure the plug is fully inserted into the wall outlet so there are no exposed blade surfaces.
- Children should be supervised when in the vicinity of the charger while plugged in.
- Do not insert fingers into the electric charger coupler.
- To reduce the risk of fire, only connect the charger to a circuit with 40 amps maximum branch circuit overcurrent protection in accordance with CEC and local electrical code.
- Do not use in a commercial garage classified for internal combustion engine vehicles due to vapors of flammable liquids (gasoline) being present.

CAUTION

CAUTION: Do not connect or disconnect the adaptor from the control box while it is in use or charging, i.e., the adaptor plug is connected to the power outlet or the vehicle connector coupler is engaged to a vehicle inlet.

CAUTION: Do not operate the charger in a temperature outside its operation range of -30ºC to +50ºC (-22ºF to +122ºF).

CAUTION: Store the charger in a clean dry place in a temperature range between -30ºC to 85ºC (-22ºF to +185ºF).

WARNING

WARNING: Do not plug the charger into an electrical outlet submerged in water or covered in snow.

WARNING: Do not use the charger during a severe rain, snow or an electrical storm.

WARNING: Avoid moisture, water, snow and foreign objects at all times.

NOTE

This product will not charge and will give a fault indication if ground is not present. Do not replace the plug with retrofit component – there are critical safety devices in the plug, and the device will not operate if it is replaced. Do not modify. This charger contains no user modifiable/repairable parts, even for experts.

MOVING & STORAGE INSTRUCTIONS

NOTE

Keep the charger/charger cable inside when not in use (out of the elements / inside the garage is acceptable). Do not use any third-party adaptors, as this can lead to a fire. Use only plugs offered from Toyota with an approved outlet. Do not unplug adaptors while charging or while the charger is plugged into the wall. The outlet must be in good condition and meet up-to-date CEC code. Make sure the cable is completely unwound before charging.

The device is not to be lifted or carried by the flexible cord (adaptor), nor the EV cable. When moving the cordset, Toyota recommends supporting the control box, coupler and EV cable to prevent damage to those components.

CHARGER COMPONENTS

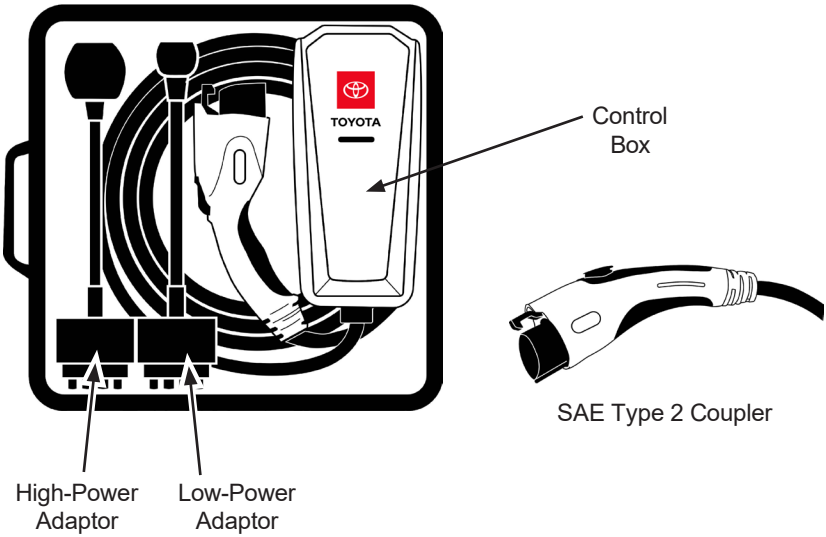

Your Toyota Mobile Charger comes standard with two adaptors: one high power and one low power. Please refer to your vehicle owner's manual for details on included and available adaptors and accessories.

TECHNICAL DATA

IC-CPD Caution U.S.

Technical Specifications →

Input/Output Rating Consommation/ Rendement Calificación eléctrica de entrada/ Calificación eléctrica de salida.	**120-240V AC ∿ 50-60 Hz,MAX 32A.** See Adapter Plug. Vous voyez la fiche de l'adaptateur. / Ve el enchufe del adaptador.
Temperature Rating / Cote de température / Calificación de temperatura	**-30C to 50C -22 F to 122 F**
Type / La Catégorie / Tipo	**6, IP67**

Information →

Read owner's manual before operating. / Vous lisez le manuel de l'utilisateur avant d'utiliser. / Lee el manual del propiertario antes de operar.

Warnings →

WARNING / AVERTISSEMENT / ADVERTENCIA

- This device is intended only for charging vehicles not requiring ventilation during charging. / Cet appareil est uniquement destiné à charger des véhicules ne nécessitant pas de ventilation pendant la charge. / Este dispositivo está diseñado solo para cargar vehículos que no requieren ventilación durante la carga.
- This device has an automatic reset feature. / Cet appareil est équipé d'un dispositif de réinitialisation automatique. / Este dispositivo tiene una función automática de reprogramación.
- Do not use this with an extension cord. / Ne pas utiliser cet appareil avec une rallonge électrique. / No lo use con un cordón de extensión.

CAUTION / ATTENTION / PRECAUCIÓN

- Connect only to properly grounded outlets. / Brancher uniquement sur des prises de courant dûment mises à la masse. / Conectar solamente a tomacorrientes con la descarga apropiada a tierra.
- Do not use this product if there is any damage to the unit. / N'utilisez pas ce produit s'il y a des dommages à l'unité. No use este producto si hay algún daño en la unidad.
- Do not remove cover or attempt to open the enclosure. **No user serviceable parts inside. Refer servicing to qualified** service personnel. / Ne pas retirer le couvercle ou essayer d'ouvrir le boitier. Aucune piéce ne peut étre changée par l'utilisateur. Faire appel à **une personne qualifiée** pour tout service de dépannage. / No saque la funda ni intente abrir el armazón. No hay piezas interiores que pueda reparar el **usuario. Derive el servicio a personal de servicio calificado.**

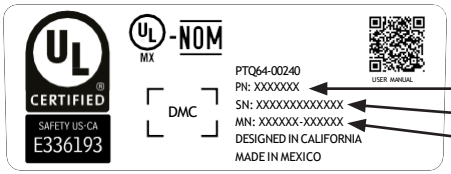

SPECIFICATIONS

Voltage:	120-240 VAC (Intended for Indoor or Outdoor use)
Maximum current:	32 amps max continuous (Intended for Indoor or Outdoor use)
Frequency:	60 Hz
Power draw at Idle:	< 2 watts
During charging:	< 4 watts
EV Cable length:	Approximately 20 ft. (6.1 m)
Weight:	8.6 lb. (3.9 kg)
Temperature – operating:	-22°F to +122°F (-30°C to +50°C)
Temperature – storage:	-22°F to +185°F (-30°C to +85°C)
Enclosure Environmental Rating:	NEMA Type 6 / IP67
Ventilation:	Not required

Specifications are subject to change without notice.

SECTION 2

USING YOUR TOYOTA MOBILE CHARGER

KNOW YOUR INDICATOR LIGHTS

The Indicator light on your charger is the first thing you will notice when you are about to plug in or unplug your vehicle. Before getting started, here is a simple explanation of the indicators.

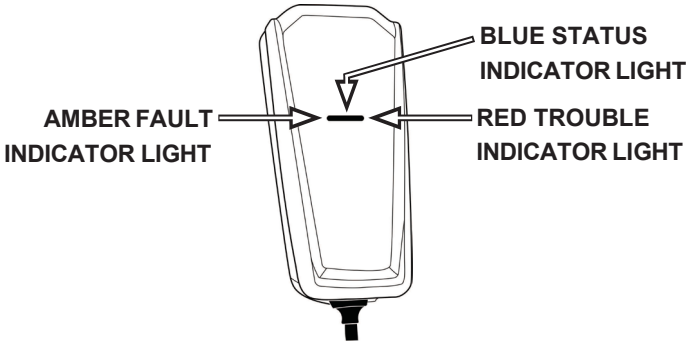

AMBER — FAULT
The AMBER FAULT Indicator illuminates to show the charger is rebooting after an error. Refer to the Troubleshooting Guide in Section 3 for more information.

BLUE — STATUS
When plugged into the wall outlet, the BLUE STATUS Indicator illuminates to show the charger is ready to use. During charging, the BLUE STATUS indicator pulses ON and OFF every two seconds. Refer to the Troubleshooting Guide in Section 3 for more information.

RED — TROUBLE
The RED TROUBLE Indicator illuminates when the charger detects an error. If the RED TROUBLE Indicator illuminates, the charger will not deliver power to the vehicle. The error must be corrected before a charging cycle can begin or continue. Refer to the Troubleshooting Guide in Section 3 for more information.

NOTE

The following indicates a normal startup safety check.

1. When first plugged into a wall socket, the AMBER, BLUE and RED indicators blink once.
2. Then the BLUE Indicator turns ON, followed by a blink of the RED indicator.
3. Lastly, the BLUE indicator turns OFF, then ON again.

The Toyota Mobile Charger comes with two adaptors. If switching adaptors between charges, the startup system check will occur again.

CHARGING YOUR VEHICLE

1. Make sure the vehicle is in park (P).
2. Insert the adaptor firmly into the control box. Then firmly insert the other end of the adaptor into the appropriate wall outlet.

   NOTE: You will hear an audible “click” when the adaptor is correctly inserted into the control box – make sure the adaptor is fully inserted and flush with the control box before inserting the other end into the wall outlet. Otherwise, it will trigger a fault or cause a longer charging session. To remove the adaptor, firmly take hold of the adaptor by the plug and pull it firmly away from the control box.

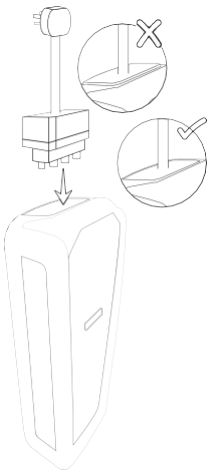

3. When the wall plug is inserted the AMBER, BLUE and RED indicators will blink once. Then the BLUE Indicator turns ON, followed by a blink of the RED indicator. Lastly, the BLUE indicator turns OFF, then ON again. If you switch adaptors between charges, this startup system check will occur again.
4. Plug the coupler into your vehicle’s charging inlet. When the coupler is fully inserted, there will be an audible clicking sound.

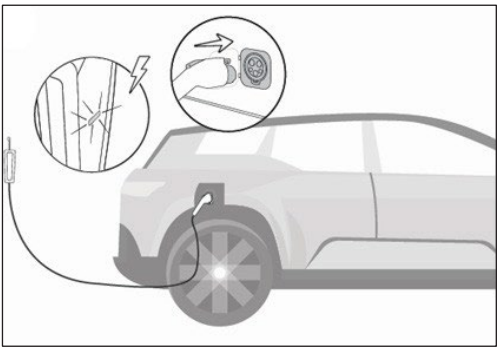

5. When charging begins, the BLUE STATUS Indicator pulses ON and OFF approximately every two seconds.
6. When charging ends, the BLUE STATUS Indicator illuminates solid blue.
7. To disconnect the coupler from the vehicle charging port: Press the release button on the coupler, then pull the coupler away from the vehicle.

NOTE

To safely discontinue charging at any time, follow the disconnect instructions in Step 7. Charging will automatically and safely stop. The BLUE STATUS Indicator remains ON (without blinking) when the coupler is removed.

When plugging the charger into an unfamiliar wall outlet, it is good practice to take few minutes to observe the charging process and confirm it is supplying the expected AC charging power before leaving the charger unattended.

The RED TROUBLE Indicator illuminates if it is not charging. The unit will turn OFF if a breaker or infrastructure GFI is tripped.

For more information about how to charge your vehicle, including charger settings and scheduling, refer to the vehicle owner's manual.

A NOTE ON AUTO-RESTART

The Auto-Restart feature helps to ensure that your vehicle is charged and ready for use when needed. A charge may be interrupted if an error is detected. Charging resumes once the error is no longer detected. The RED TROUBLE Indicator illuminates during an error condition.

The exception to immediate Auto-Restart is when the interruption is due to a ground fault circuit interruption (GFI/GFCI). The charger will attempt to restart 15 minutes after this happens. After a fourth attempt to restart, the charger shuts down and the RED TROUBLE Indicator stays ON.

If the fault persists, do not continue to try to charge your vehicle. Contact Toyota Customer Support.

CARE INSTRUCTIONS

Do not use hard cleaners or solvents as this may damage your Toyota Mobile Charger. Do not kink or place undue stress on the charger cables. If the charger overheats, bring it out of direct sunlight.

Section 3

TROUBLESHOOTING

TROUBLESHOOTING GUIDE:

Please refer to this Troubleshooting Guide for possible solutions to common errors or difficulties with charging your vehicle using your Toyota Mobile Charger.

NOTE

Do not attempt to repair or service the charger yourself. There are no user serviceable parts inside this product.

A RED TROUBLE Indicator may be triggered by several sources including the charger, the utility service, or the vehicle. See the Troubleshooting tips below.

The RED TROUBLE Indicator turns ON when the charger detects an error, whether it is connected to your vehicle or not. When the RED TROUBLE Indicator is ON, the charger will not deliver power to the vehicle. The error must be corrected before charging begins or resumes.

CHARGER MODE	AMBER INDICATOR	BLUE INDICATOR	RED INDICATOR	MODE EXPLANATION	TROUBLESHOOTING ACTION
UNPOWERED	OFF	OFF	OFF	THE MOBILE CHARGER IS NOT POWERED. IF LED INDICATORS ARE OFF AFTER PLUGGING THE ADAPTOR INTO THE OUTLET, THERE MAY BE NO POWER FROM THE WALL OUTLET.	MAKE SURE THE OUTLET IS OPERATIONAL AND THE CIRCUIT BREAKER IS IN THE "ON" POSITION. TRY USING ANOTHER OUTLET. ENSURE ADAPTOR IS FULLY INSERTED. ENSURE THE PLUG IS NOT SEVERELY DEGRADED. IF THE ERROR PERSISTS, CONTACT TOYOTA CUSTOMER SUPPORT.
CHARGING	OFF	PULSING	OFF	THE MOBILE CHARGER IS SUCCESSFULLY CHARGING.	NO ACTION REQUIRED.
STANDBY	OFF	ON	OFF	THE MOBILE CHARGER IS POWERED AND READY TO CHARGE. THE MOBILE CHARGER IS NOT CHARGING THE VEHICLE.	IF YOU EXPECT THE MOBILE CHARGER TO BE CHARGING THE VEHICLE, ENSURE THE VEHICLE COUPLER IS PROPERLY INSERTED INTO THE VEHICLE. CHECK AND ADJUST YOUR CHARGING TIME PREFERENCES IN SYNC. IF THE VEHICLE IS STILL NOT CHARGING, CONTACT TOYOTA CUSTOMER SUPPORT.
REBOOTING	ON	ON	ON	THE MOBILE CHARGER IS AUTOMATICALLY RECOVERING AFTER ENCOUNTERING AN ERROR.	WAIT FOR THE MOBILE CHARGER TO RETURN TO STANDBY. IF THE MOBILE CHARGER CYCLES FOR MORE THAN 2-3 MINUTES, UNPLUG THE VEHICLE COUPLER. UNPLUG AND REPLUG IN THE ADAPTOR. IF THE ISSUE PERSISTS, CONTACT TOYOTA CUSTOMER SUPPORT.

CHARGER MODE	AMBER INDICATOR	BLUE INDICATOR	RED INDICATOR	MODE EXPLANATION	TROUBLESHOOTING ACTION
CHARGING REDUCED	ON	PULSING	OFF	THE MOBILE CHARGER IS CHARGING AT A REDUCED RATE DUE TO OVERHEATING.	ENSURE THE ADAPTOR AND CONTROL BOX ARE PROPERLY CONNECTED. DISCONNECT, THEN RECONNECT THE ADAPTOR. IF THE MOBILE CHARGER IS WARM OR IN A HOT ENVIRONMENT, TRY CHARGING IN A COOLER AREA. TRY A DIFFERENT OUTLET. TRY A DIFFERENT ADAPTOR IF YOU HAVE ONE AVAILABLE. IF THE ERROR PERSISTS, CONTACT TOYOTA CUSTOMER SUPPORT.
CHARGING REDUCED (AC PLUG OR WALL OUTLET)	1 FLASH	PULSING	OFF	THE MOBILE CHARGER IS CHARGING AT A REDUCED RATE DUE TO OVERHEATING OF THE ADAPTOR OR THE WALL OUTLET.	ENSURE THE ADAPTOR AND CONTROL BOX ARE PROPERLY CONNECTED. DISCONNECT, THEN RECONNECT THE ADAPTOR. IF THE MOBILE CHARGER IS WARM OR IN A HOT ENVIRONMENT, TRY CHARGING IN A COOLER AREA. TRY A DIFFERENT OUTLET. TRY A DIFFERENT ADAPTOR IF YOU HAVE ONE AVAILABLE. IF THE ERROR PERSISTS, CONTACT TOYOTA CUSTOMER SUPPORT.
USER TROUBLE-SHOOTING	ON	OFF	OFF	THE MOBILE CHARGER HAS ENCOUNTERED A FAULT THAT REQUIRES TROUBLESHOOTING.	ENSURE THE ADAPTOR AND CONTROL BOX ARE PROPERLY CONNECTED. DISCONNECT, THEN RECONNECT THE ADAPTOR. IF THE MOBILE CHARGER IS WARM OR IN A HOT ENVIRONMENT, TRY CHARGING IN A COOLER AREA. TRY A DIFFERENT OUTLET. TRY A DIFFERENT ADAPTOR IF YOU HAVE ONE AVAILABLE. IF THE ERROR PERSISTS, CONTACT TOYOTA CUSTOMER SUPPORT.
NON-RECOVERABLE FAULT	OFF	OFF	ON	THERE IS AN INTERNAL FAULT IN THE MOBILE CHARGER THAT CAN-NOT BE RECOVERED	TRY A DIFFERENT ADAPTOR IF YOU HAVE ONE AVAILABLE. IF ERROR PERSISTS, CONTACT TOYOTA CUSTOMER SUPPORT.
NON-RECOVERABLE FAULT (ADAPTOR)	OFF	OFF	1 FLASH	THERE IS AN INTERNAL FAULT IN THE ADAPTOR THAT CANNOT BE RECOVERED.	TRY USING ANOTHER ADAPTOR IF YOU HAVE ONE AVAILABLE. IF NOT, CONTACT TOYOTA CUSTOMER SUPPORT ABOUT OBTAINING A REPLACEMENT. IF YOUR WARRANTY HAS EXPIRED, YOU CAN ORDER A REPLACEMENT FROM YOUR TOYOTA CUSTOMER SUPPORT.
GROUND LEAKAGE FAULT	OFF	OFF	PULSING	ELECTRICAL CURRENT IS LEAKING THROUGH A POTENTIALLY UNSAFE PATH.	POTENTIAL SHOCK HAZARD — IMMEDIATELY TURN OFF CIRCUIT BREAKER FOR THE OUTLET WITHIN HOME. DISCONTINUE USE. CONTACT TOYOTA CUSTOMER SUPPORT ABOUT OBTAINING A REPLACEMENT.

This page intentionally left blank.

APPENDIX

INSTALLING THE WALL HANGER

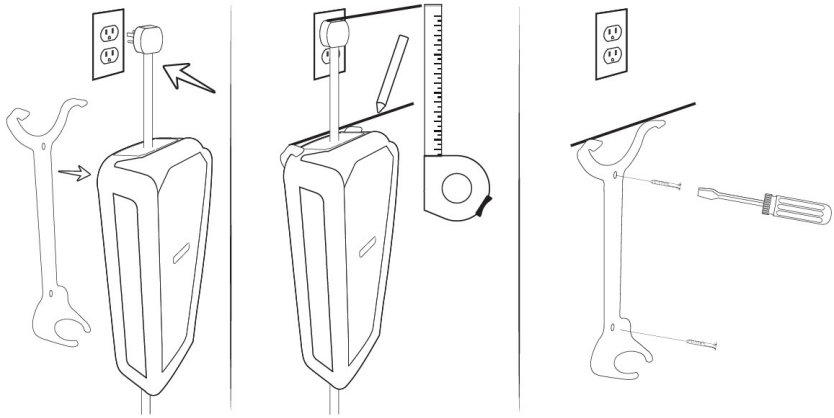

WALL HANGER MOUNTING INSTRUCTION

NOTE Intended for indoor or outdoor use.

1. Choose a location to install the wall hanger.

   The wall hanger should be mounted to a wall stud, located close to the wall outlet and your vehicle's charge receptacle.

   NOTE: Drywall and masonry wall installations require the use of appropriate fasteners.
2. Measure up approximately 8 inches from the desired receptacle and mark the location. Before drilling holes, it is recommended to verify the control box fits correctly in the hanger after it is plugged in.
3. Drill the preferred mounting holes through the back of the wall hanger using a 7/32-inch drill bit.
4. Using a Phillips screwdriver, tighten the screws for the wall hanger.

IMPORTANT SAFETY INSTRUCTIONS PERTAINING TO A RISK OF ELECTRIC SHOCK

DANGER

High voltage is present in your electric meter housing and power distribution service panel. Contact with high voltage can cause death or serious personal injury.

Risk of electric shock – Parts inside this product have a risk of shocking persons.

WARNING

DO NOT operate your charger with a damaged adaptor, cable, charger coupler, or control box. Visually inspect the cable, charger coupler and charger module for damage before each use. Do not operate if any visual damage is apparent anywhere, then contact Toyota Customer Support.

ALWAYS position the charger cable so it will not be driven over, stepped on, tripped over, damaged or stressed. To prevent personal injury and damage to the charger, ALWAYS stow the charger on hanger or in the stowage bag after use.

Use the charger only to supply power to electric vehicles equipped with an SAE J1772 compliant vehicle receptacle. For more information, refer to the vehicle owner's manual.

NOTE

Disconnect the charger from the wall outlet before cleaning it. To clean the charger, wipe it with a clean cloth dampened with water or a mild detergent solution suitable for use on automobile paint. Do not use chemicals or solvents. Do not submerge the charger in any type of fluid.

WARNING

This product must be grounded. If it should malfunction or break down, grounding provides a path of least resistance for electric current to reduce the risk of electric shock. This product is equipped with an adaptor having an equipment grounding conductor and a grounding plug. The plug must be inserted into an appropriate outlet that is properly installed and grounded in accordance with all local codes and ordinances.

Improper connection of the electrical outlet grounding conductor might result in a risk of electric shock. Check with a qualified electrician if you are uncertain whether or not the electrical outlet is properly grounded. Do not modify the plug provided with the product if it does not fit in the outlet – have a proper outlet installed by a qualified electrician.

SAVE THESE INSTRUCTIONS

This manual contains important instructions for the Toyota Mobile Charger that should be followed during installation, operation and maintenance of the product.

FCC INFORMATION

This device complies with Part 15 of the FCC Rules. Operation is subject to the following two conditions:

- This device may not cause harmful interference.
- This device must accept any interference received, including interference that may cause undesired operation.

This product has been designed to protect against Radio Frequency Interference (RFI). However, there are some instances where high-powered radio signals or nearby RF- producing equipment could affect operation.

If you suspect your charger is receiving interference, take the following steps before contacting Customer Support for service:

1. Relocate away from electrical appliances or equipment during charging.
2. Turn off nearby electrical appliances or equipment during charging.

Important! Changes or modifications to this product by anyone other than an authorized service provider will void FCC compliance and the product will not be serviceable.

ISED Canada Compliance Statement

This device conforms to Innovation, Science and Economic Development Canada’s license-exempt ICES-003 Class B specifications.

SAFETY FEATURES

The charger is designed with your safety as the highest priority and includes the following safety features to protect against the risk of electric shock:

- **Service Ground Check:** The charger constantly checks for the presence of a service ground connection. If the service ground ever fails, the charger RED TROUBLE Indicator turns ON and shuts down power to the vehicle.
- **Thermal Event Sensor:** The charger module senses out-of-ordinary thermal events and will decrease charging current or shut the unit down if required.
- **GFCI Protection:** The charger is equipped with a ground fault circuit interruption (GFI/GFCI) reaction system to protect against electric shock. If the charger module detects an output ground fault, it will shut down power to the output cable and illuminate the RED TROUBLE indicator.
- **Insulation:** The charger module, adaptor, cable assembly, and charge coupler are completely insulated (no exposed live parts) to protect against electric shock.
- **Unintentional Disconnection:** The charge coupler is designed to minimize unintentional disconnection. A pilot signal wire in the cable and charge coupler eliminates the possibility of electric shock when not connected to a vehicle or if an unintended disconnect occurs during a charge. Disconnection during charging is safe.

INDEX

A
auto restart 16

B
blue status indicator 14, 15, 16

C
charger coupler 7, 8, 23

circuit breaker..... 19

components.....9, 10

customer support 16, 18, 19, 25

E
electric shock 6, 23, 26

environmental rating..... 12

F
features 26

G
GFI/GFCI.....16, 26

H
hanger 22

I
insulated 26

indicator light..... 14

O
output ground..... 26

outlet 7, 8, 9, 14, 15, 16, 18, 19

P
pilot signal wire 26

R
receptacle 22, 23

RED TROUBLE indicator..... 14, 16, 18, 26

release button 15

S
SAE J1772..... 23

safety features 26

serial number 3, 11

service ground 26

STATUS indicator..... 14, 15, 16

T
temperature..... 7, 8, 12

TROUBLE indicator 14, 16, 18, 26

W
warranty 19

weight 12